STICK SLT4 REMOTE

SLRD Remote Driver Pendant Install 1 of 3

Installation ou de montage

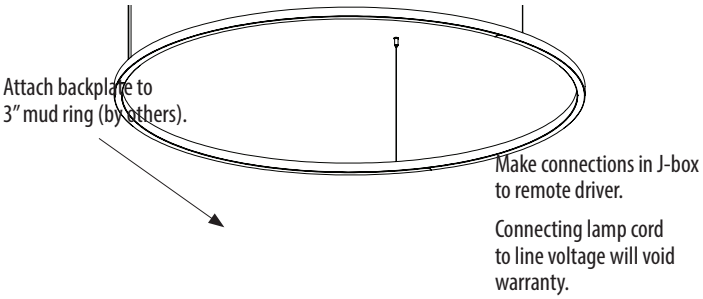

WARNING: disconnect main power at the source prior to installation!

Only qualified electricians should install Delray Lighting products.

Drivers must be accessible after installation.

Multiple drivers must be mounted no less than 4 inches apart side-by-side, and 1 inch apart end-to-end, to avoid overheating.

Maximum canopy to fixture distance: 25 ft. Maximum canopy to driver distance: 100 ft. (with 10 AWG wire).

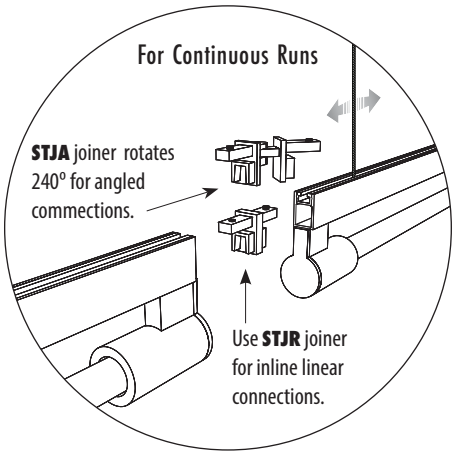

Attach canopy to backplate with AC cable gripper base.

Insert 1/16" aircraft cable into gripper, reinsert gripper into gripper base.

Feed lamp cord through threaded nipple and back plate. use provided O-rings or cable ties to run cord along side aircraft cables.

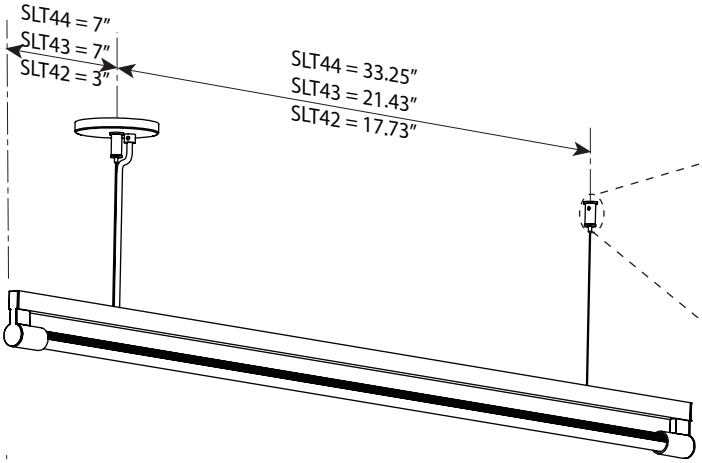

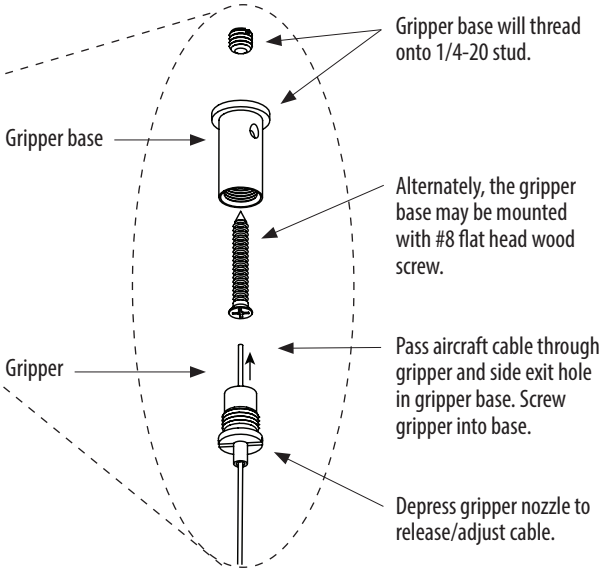

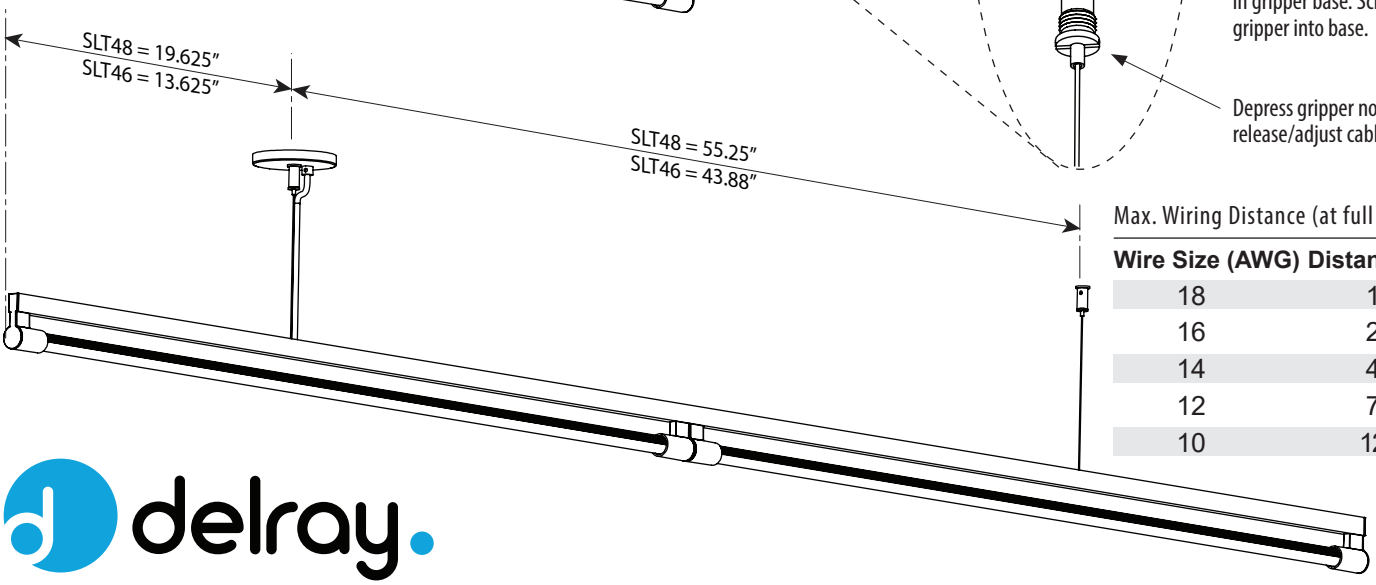

Max. Wiring Distance (at full load)

Wire Size (AWG)	Distance (ft.)
18	18
16	29
14	46
12	71
10	120

delray.

NOV 2020

STICK SLT4 REMOTE

SLRD Remote Driver Pendant Install 2 of 3

Installation ou de montage

Driver enclosure has two knockouts for 1/2" conduit fittings, and may be ordered with optional end caps with knockouts (shown).

Knockouts are located 3.5" from the enclosure end.

Snap-fit cover

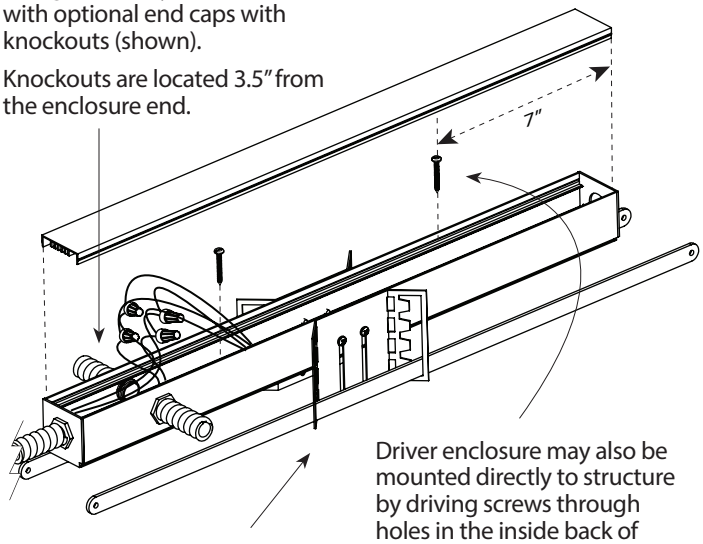

Driver enclosure may also be mounted directly to structure by driving screws through holes in the inside back of the enclosure.

Bar hangers (included) may be used for suspended ceiling mount (or removed if not needed).

WARNING: disconnect main power at the source prior to installation!

Only qualified electricians should install Delray Lighting products.

Drivers must be accessible after installation.

Multiple drivers must be mounted no less than 4 inches apart side-by-side, and 1 inch apart end-to-end, to avoid overheating.

Maximum canopy to fixture distance: 25 ft. Maximum canopy to driver distance: 100 ft. (with 10 AWG wire).

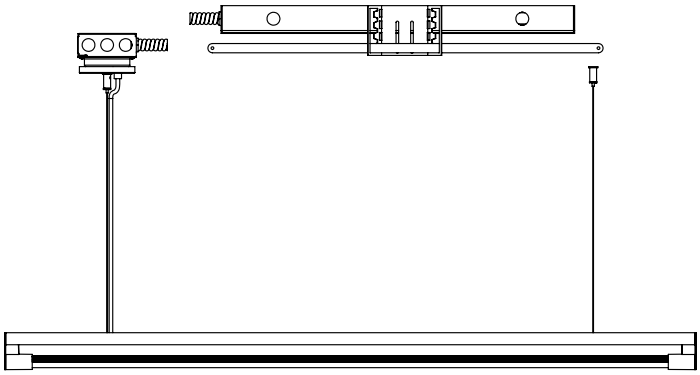

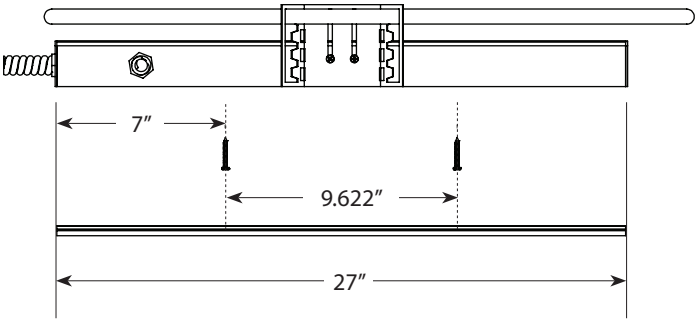

Max. Wiring Distance (at full load)

Wire Size (AWG)	Distance (ft.)
18	18
16	29
14	46
12	71
10	120

Emergency Battery Backup

Optional **EM** driver housing is longer, with remote switch for surface mount.

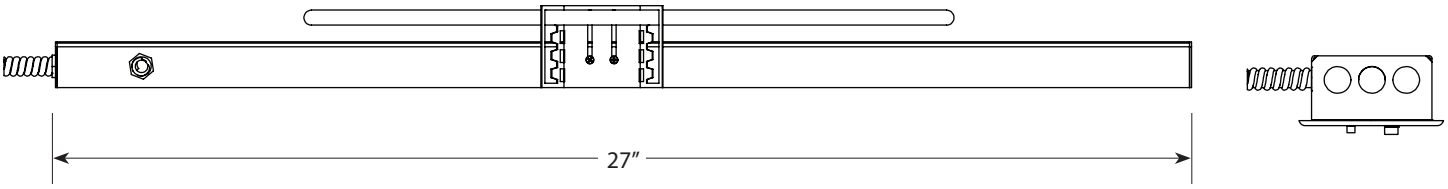

Wiring | Single Lamp Cord

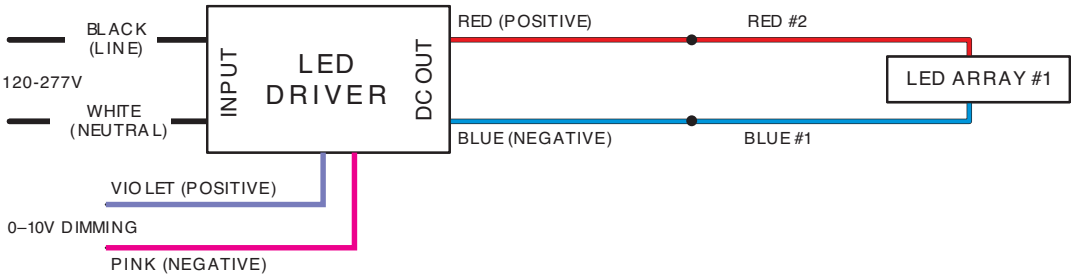

For Models:

SLT4
SLT6
SLT7
SLW5

Wiring | Emergency Backup

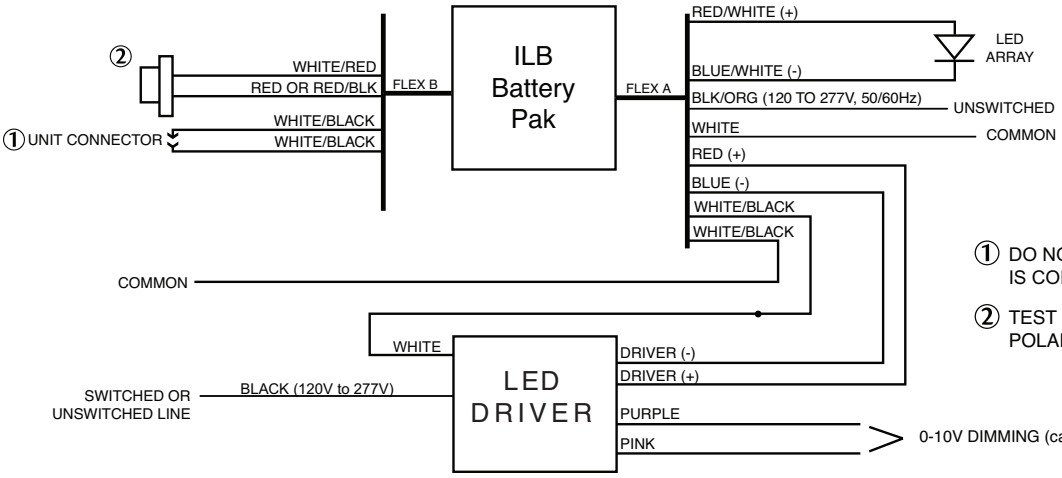

① DO NOT MATE CONNECTOR UNTIL INSTALLATI IS COMPLETE AND AC POWER IS SUPPLIED.

② TEST ACCESSORY LEADS-OBSERVE PROPER POLARITY WIRING.